Rexroth
Bosch Group

Hydraulic Drive
HYDRODRIVE GMH

The Drive & Control Company

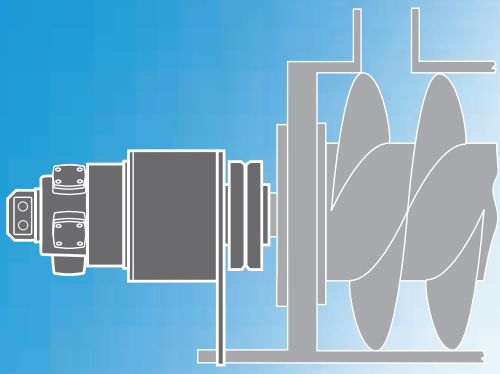

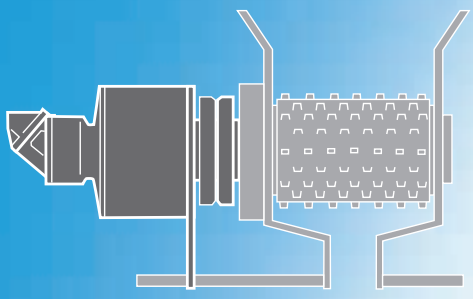

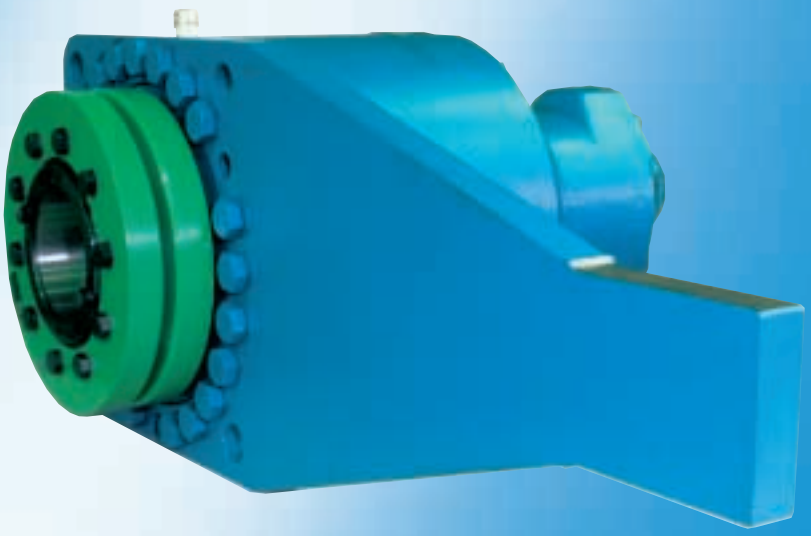

MOBILEX ist ein eingetragenes Warenzeichen.

RE 76108 06/00

Gear Technology

Contents Page

Section I

Description I/5
Technical Details, Product Code I/6

Section II

Technical Data, Dimensions

Size	Output Torques		Hydraulic Motor Selection MR / MRE	A2FE	A2FM	
HYDRODRIVE GMH 0050 T3	20000 Nm			■		II 50 / 1
HYDRODRIVE GMH 0080 T2	31000 Nm	*	■			II 80 / 1-4
HYDRODRIVE GMH 0080 T3	31000 Nm	*		■		II 80 / 5-6
HYDRODRIVE GMH 0110 T2	46000 Nm	*	■			II 110 / 1-4
HYDRODRIVE GMH 0110 T3	46000 Nm	*		■		II 110 / 5-7
HYDRODRIVE GMH 0110 T4	46000 Nm			■		II 110 / 8-9
HYDRODRIVE GMH 0160 T3	70000 Nm			■		II 160 / 1
HYDRODRIVE GMH 0200 R2	75800 Nm				■	II 200 / 1
HYDRODRIVE GMH 0300 R2	117000 Nm				■	II 300 / 1
HYDRODRIVE GMH 0425 R2	150600 Nm				■	II 425 / 1
HYDRODRIVE GMH 0870 R3	328000 Nm				■	II 870 / 1-2

General operation hints
for the hydraulic motors see RE 90270

Hints for		
	A2FE	RE 91008
	A2FM	RE 91001
	MR/MRE	RE 15228

* HYDRODRIVE GMH 0080 T2/T3 and 0110 T2/T3
are also available with hollow shaft type SO.
Please refer to the relevant dimensions.

Notice

Description

HYDRODRIVE GMH
Hydraulic Drives

are ready-to-mount secondary drive units for hydraulic systems in all applications where high torques are required at low speed rates. They are a useful alternative to low-speed hydraulic motors. The HYDRODRIVE GMH unit combines hydraulic motors (Hydromatik and Calzoni make) for hydrostatic transmission of power with planetary gearboxes type REDULUS as mechanical torque increasing elements.

The gear units described in this bulletin are subject to constant updating and technical advancement. To suit the specific needs of our customers with respect to dimensions and output further variants can be made available on request.
We are prepared to give advice and provide assistance whenever needed, even in the project stage, to find the most appropriate application solution for you.

HYDRODRIVE GMH
as drive element for a shredder for used tires

HYDRODRIVE GMH units are the ideal hydraulic driving solution with the following specific advantages:

- **Output torque between 20.0 and 698 kNm**
- **Total displacement of hydraulic motor 5.2 to 205.9 liters per revolution**
- **Easy starting even under load**
- **Compact design**
- **Minimum space requirements**
- **Low weight**
- **Excellent true running at low speed**
- **Long service life due to the robust hydraulic motor and sturdy planetary gearbox**
- **Also available with multiple-disk parking brake** (mounting length may change)
- **Design with variable displacement hydraulic motors for secondary control applications on request**
- **Various displacement volumes through different hydraulic motors and transmission ratios**

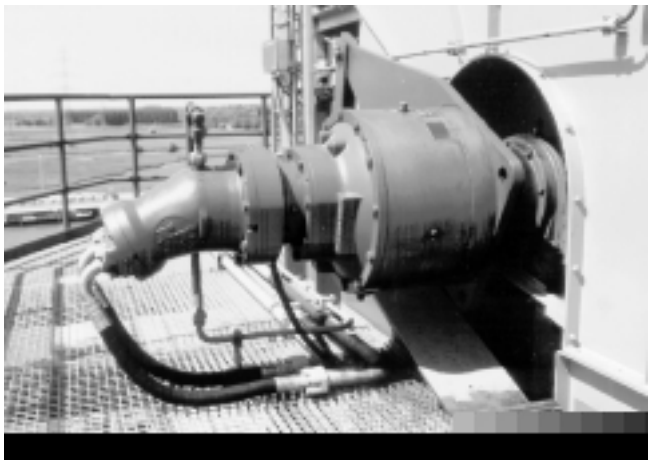

HYDRODRIVE GMH
ship unloading plant drive unit

Additional benefits due to shaft-mounted design:

- **No foundation needed**
- **Alignment work is not required**
- **No coupling needed**
- **Torque transmission via shrink ring** (included in supply scope)
- **Attached torque reaction element**

HYDRODRIVE GMH
as drive element for a recycling unit

GMH 0080 T2 HTO

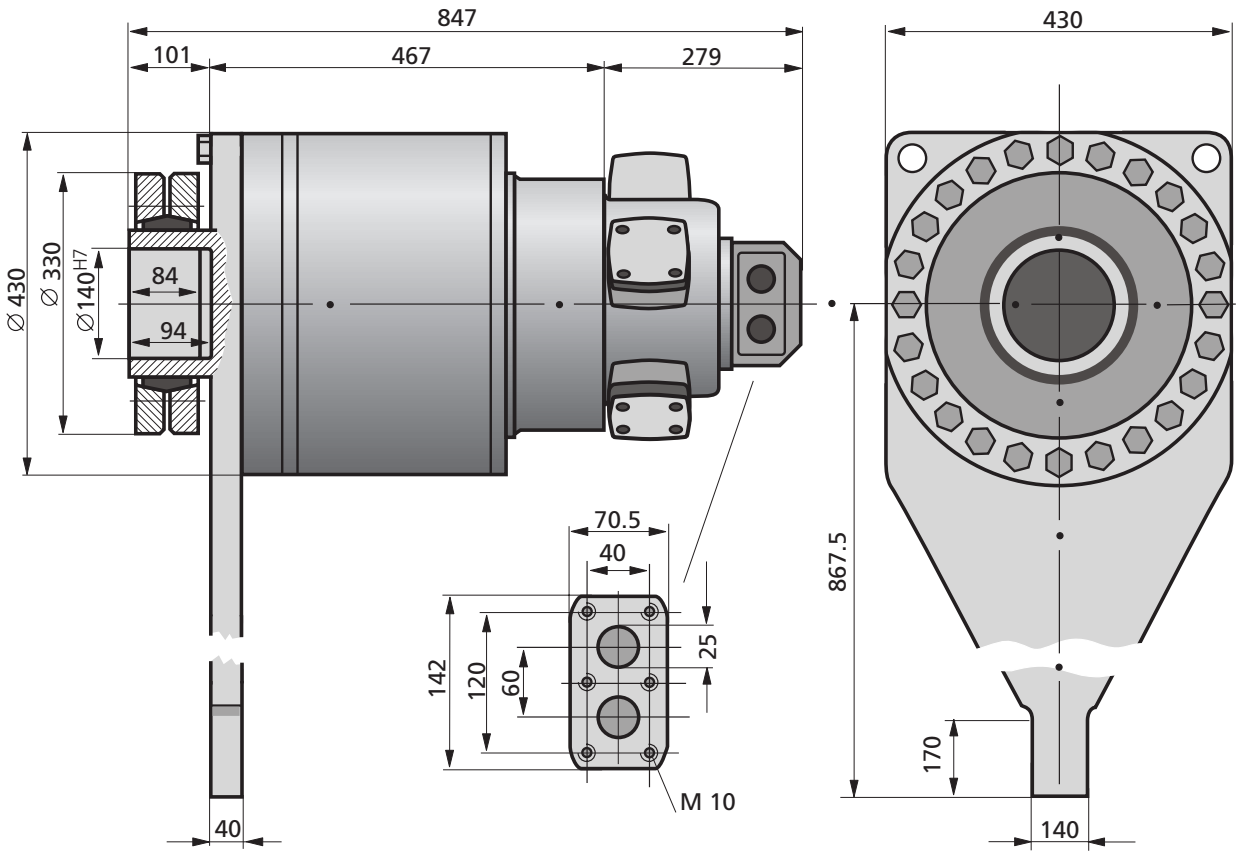

Technical Data (theoretical values, without consideration η_{mech} and η_v; values rounded)

GMH 0080 T2 HTO - MRE 500 - 1 **Weight: 602 kg**

Transmission ratio	**i**		**16,61**	**20,71**
Motor displacement	V_g	cm³	497,9	497,9
Total displacement	$V_{g\ total}$	cm³/rev.	8270	10312
Motor speed	$n_{1\ max}$	rpm	600	600
Output speed	$n_{2\ max}$	rpm	36,1	29,0
Inlet flow rate at n_{max}	$q_{v\ max}$	l/min	299	299
Differential pressure	Δp	bar	210	189
	Δp_{peak}	bar	350	350
Specific torque	T_k	Nm/bar	131	164
Motor torque	T_1	Nm	1662	1497
Output torque	$\mathbf{T_{2\ perm.}}$	**Nm**	**27614**	**31000**
Output torque	$\mathbf{T_{2\ max}}$	**Nm**	**46023**	**57384**

GMH 0080 T2 HTO SO

Hollow Shaft Alternative: ø 155 mm

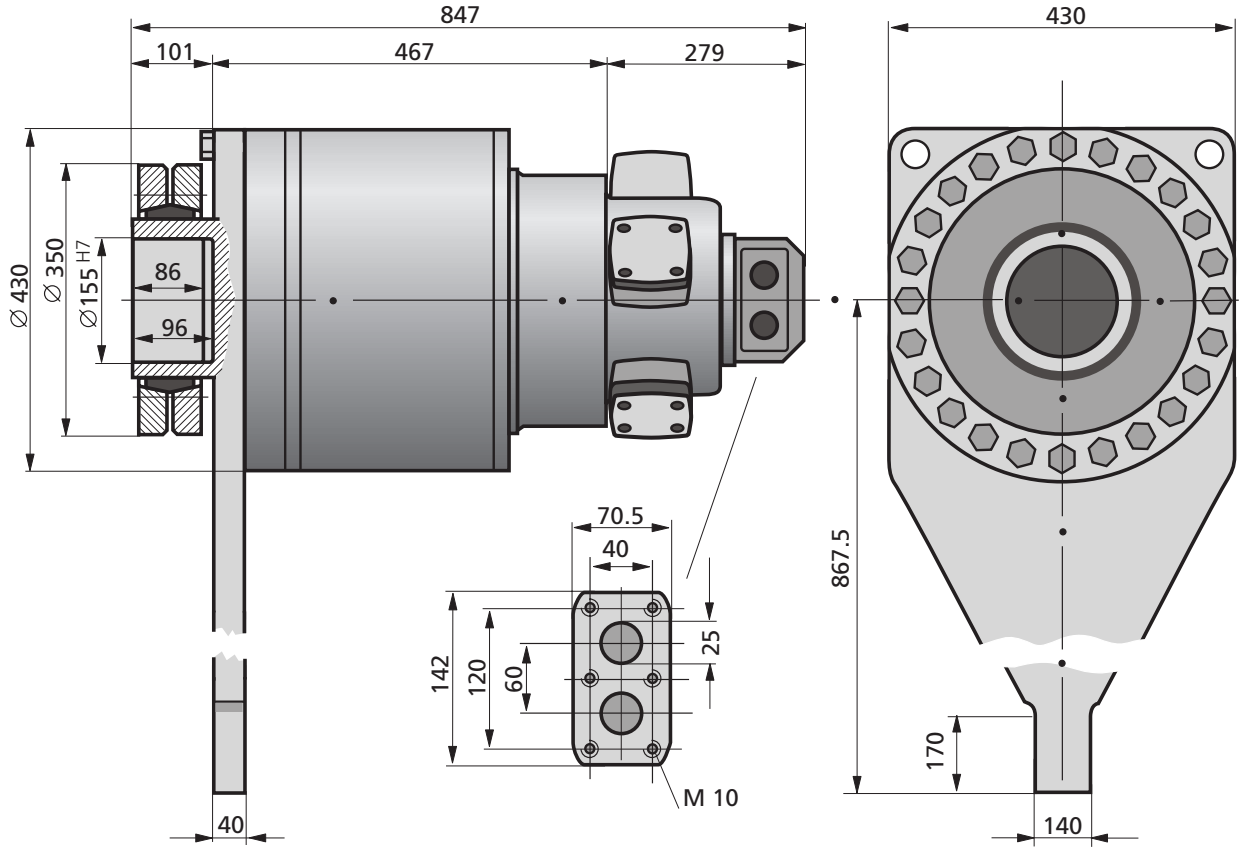

Technical Data (theoretical values, without consideration η_{mech} and η_v; values rounded)

GMH 0080 T2 HTO SO - MR 350 - 1

Weight: 602 kg

Transmission ratio	**i**		**16,61**	**20,71**
Motor displacement	V_g	cm³	349,5	349,5
Total displacement	$V_{g\ total}$	cm³/rev.	5805	7238
Motor speed	$n_{1\ max}$	rpm	600	600
Output speed	$n_{2\ max}$	rpm	36,1	29,0
Inlet flow rate at n_{max}	$q_{v\ max}$	l/min	271,0	271,0
Differential pressure	Δp	bar	250	250
	Δp_{peak}	bar	420	420
Specific torque	T_k	Nm/bar	92	115
Motor torque	T_1	Nm	1389	1389
Output torque	$T_{2\ perm.}$	**Nm**	**23076**	**28772**
Output torque	$T_{2\ max}$	**Nm**	**38767**	**48336**

GMH 0080 T2 HTO SO - MR 450 - 1

Weight: 602 kg

Transmission ratio	**i**		**16,61**	**20,71**
Motor displacement	V_g	cm³	451,6	451,6
Total displacement	$V_{g\ total}$	cm³/rev.	7501	9353
Motor speed	$n_{1\ max}$	rpm	600	600
Output speed	$n_{2\ max}$	rpm	36,1	29,0
Inlet flow rate at n_{max}	$q_{v\ max}$	l/min	271,0	271,0
Differential pressure	Δp	bar	250	208
	Δp_{peak}	bar	420	420
Specific torque	T_k	Nm/bar	119	149
Motor torque	T_1	Nm	1795	1497
Output torque	$T_{2\ perm.}$	**Nm**	**29817**	**31000**
Output torque	$T_{2\ max}$	**Nm**	**50092**	**62457**

GMH 0080 T2 HTO SO

Hollow Shaft Alternative: ø 155 mm

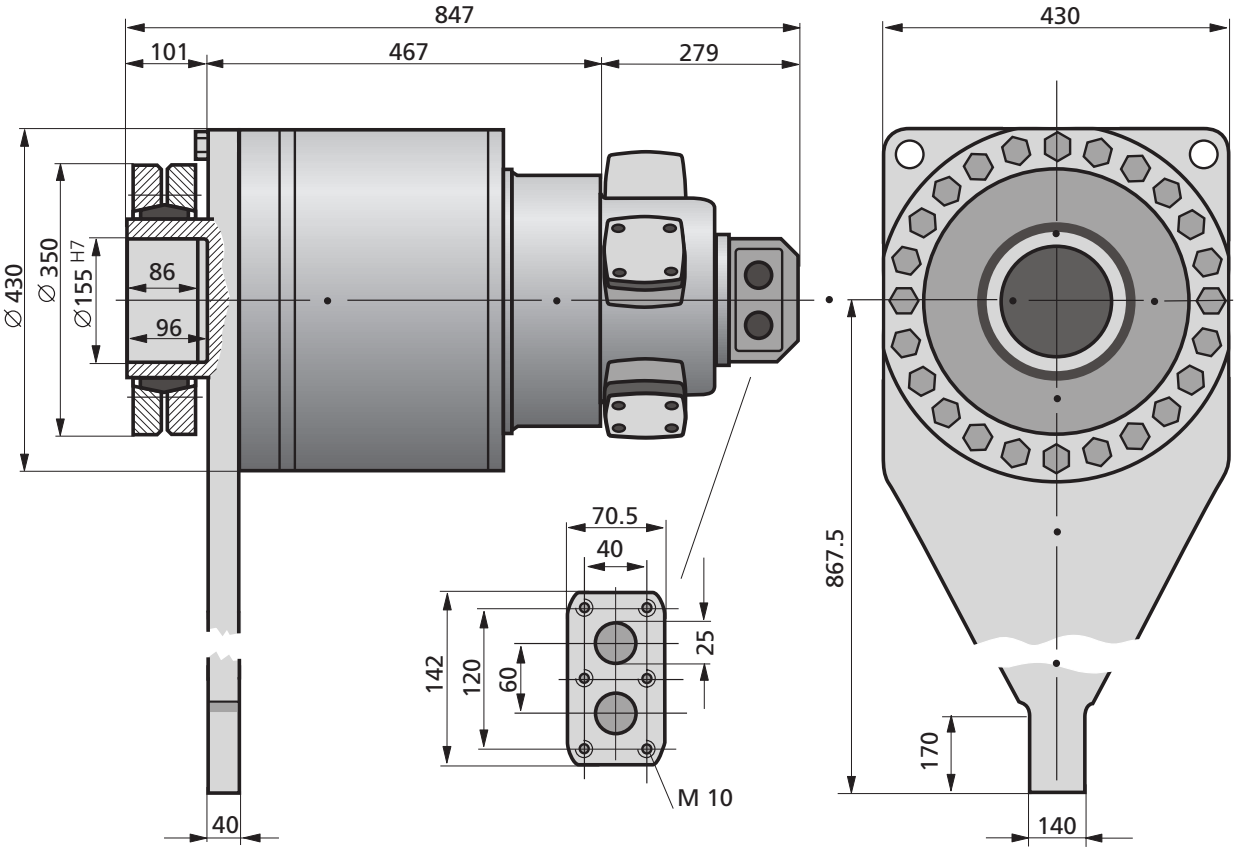

Technical Data (theoretical values, without consideration η_{mech} and η_v; values rounded)

GMH 0080 T2 HTO SO - MRE 500 - 1 **Weight: 602 kg**

Transmission ratio	**i**		**16,61**	**20,71**
Motor displacement	V_g	cm³	497,9	497,9
Total displacement	$V_{g\ total}$	cm³/rev.	8270	10312
Motor speed	$n_{1\ max}$	rpm	600	600
Output speed	$n_{2\ max}$	rpm	36,1	29,0
Inlet flow rate at n_{max}	$q_{v\ max}$	l/min	299	299
Differential pressure	Δp	bar	210	189
	Δp_{peak}	bar	350	350
Specific torque	T_k	Nm/bar	131	164
Motor torque	T_1	Nm	1662	1497
Output torque	$\mathbf{T_{2\ perm.}}$	**Nm**	**27614**	**31000**
Output torque	$\mathbf{T_{2\ max}}$	**Nm**	**46023**	**57384**

GMH 0080 T3 HTO

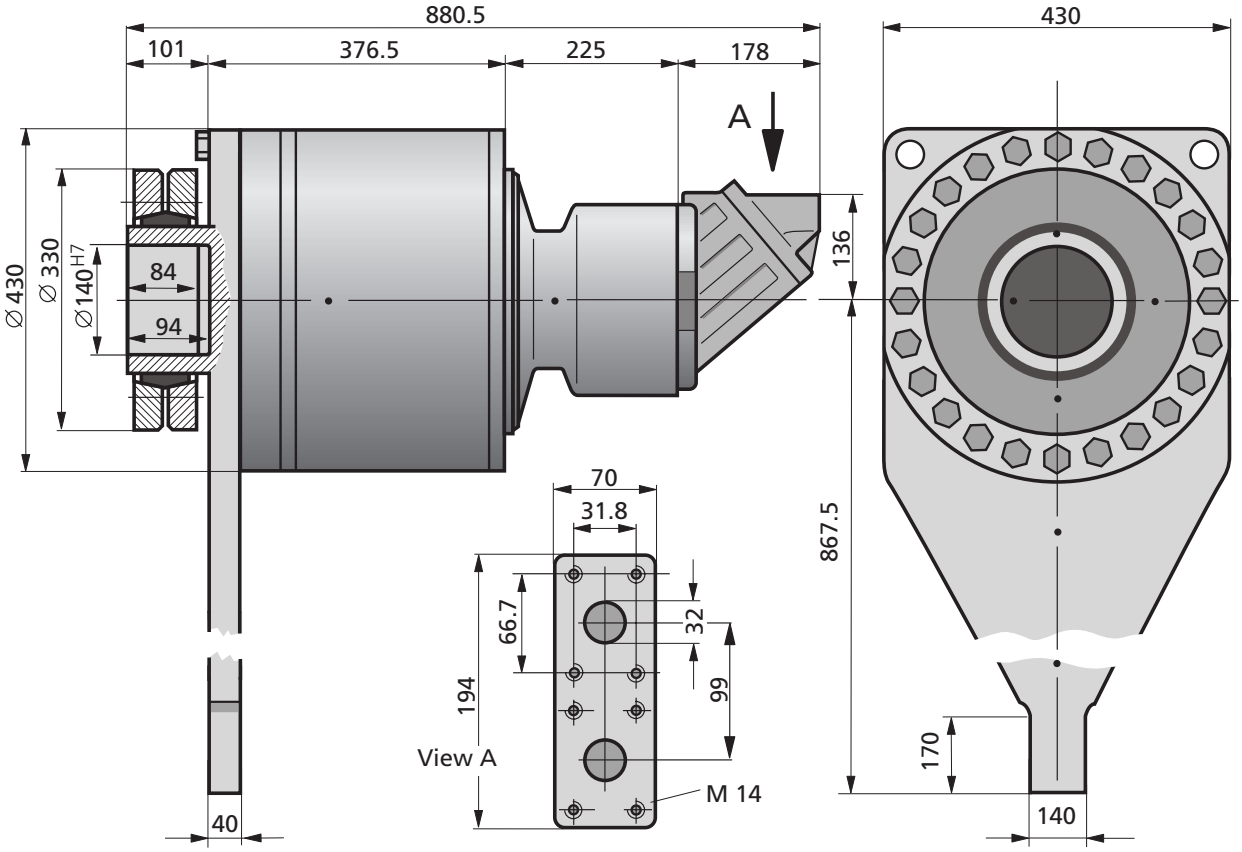

Technical Data (theoretical values, without consideration η_{mech} and η_v; values rounded)

GMH 0080 T3 HTO - A2FE 107 / 61W-VZL

Weight: 519 kg

Transmission ratio	**i**		**72,82**	**90,82**	**111,86**
Motor displacement	V_g	cm³	107	107	107
Total displacement	$V_{g\ total}$	cm³/rev.	7792	9718	11969
Motor speed	$n_{1\ max}$	rpm	3900	3900	4000
Output speed	$n_{2\ max}$	rpm	53,6	42,9	35,8
Inlet flow rate at n_{max}	$q_{v\ max}$	l/min	427	427	427
Differential pressure	Δp	bar	250	201	163
	Δp_{peak}	bar	450	405	329
Specific torque	T_k	Nm/bar	124	155	190
Motor torque	T_1	Nm	426	341	277
Output torque	$T_{2\ perm.}$	**Nm**	**31000**	**31000**	**31000**
Output torque	$T_{2\ max}$	**Nm**	**55750**	**62550**	**62550**

GMH 0080 T3 HTO - A2FE 125 / 61W-VZL

Weight: 521 kg

Transmission ratio	**i**		**72,82**	**90,82**	**111,86**
Motor displacement	V_g	cm³	125,0	125,0	125,0
Total displacement	$V_{g\ total}$	cm³/rev.	9103	11353	13983
Motor speed	$n_{1\ max}$	rpm	3900	3900	4000
Output speed	$n_{2\ max}$	rpm	53,6	42,9	35,8
Inlet flow rate at n_{max}	$q_{v\ max}$	l/min	427	427	427
Differential pressure	Δp	bar	214	172	139
	Δp_{peak}	bar	432	347	281
Specific torque	T_k	Nm/bar	145	181	222
Motor torque	T_1	Nm	426	341	277
Output torque	$T_{2\ perm.}$	**Nm**	**31000**	**31000**	**31000**
Output torque	$T_{2\ max}$	**Nm**	**62550**	**62550**	**62550**

GMH 0080 T3 HTO SO

Hollow Shaft Alternative: ø 155 mm

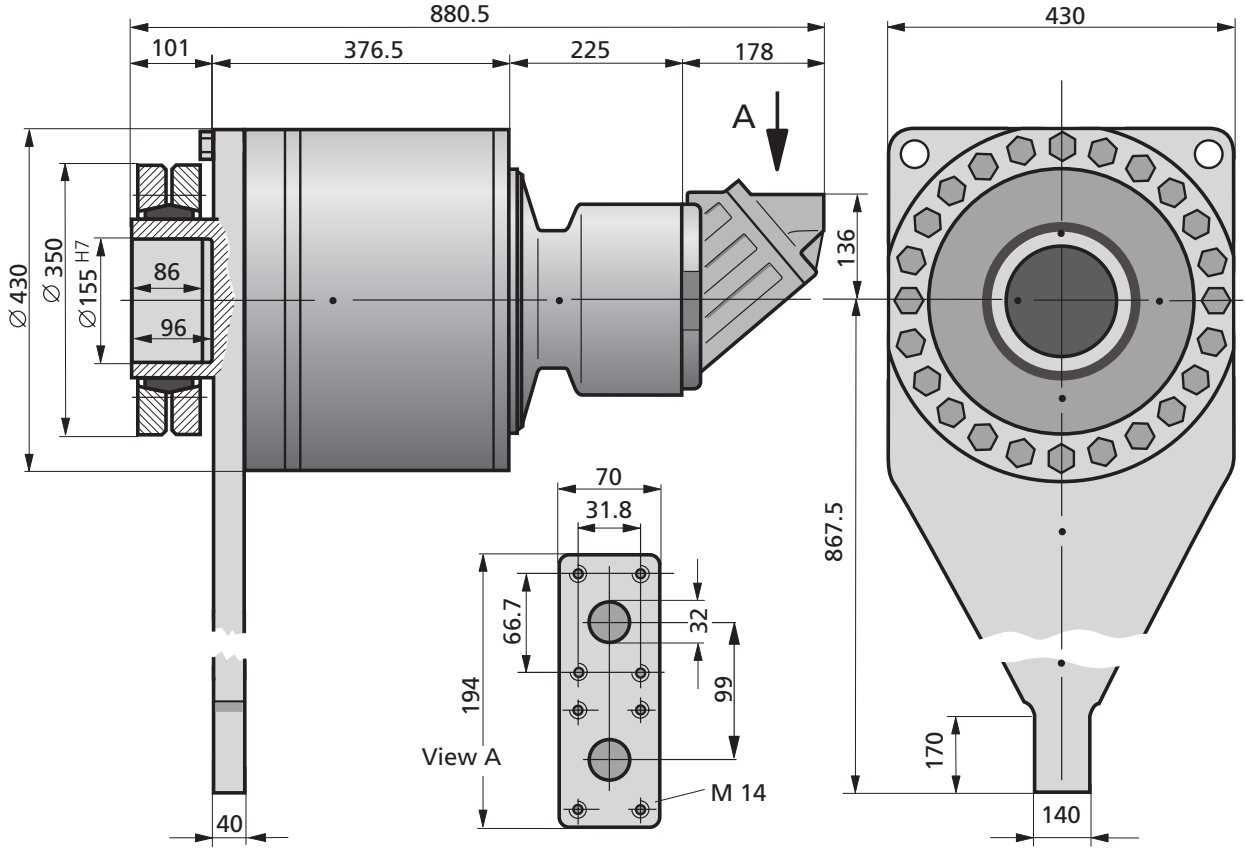

Technical Data (theoretical values, without consideration η_{mech} and η_v; values rounded)

GMH 0080 T3 HTO SO - A2FE 107 / 61W-VZL

Weight: 519 kg

Transmission ratio	**i**		**72,82**	**90,82**	**111,86**
Motor displacement	V_g	cm³	107	107	107
Total displacement	$V_{g\ total}$	cm³/rev.	7792	9718	11969
Motor speed	$n_{1\ max}$	rpm	3900	3900	4000
Output speed	$n_{2\ max}$	rpm	53,6	42,9	35,8
Inlet flow rate at n_{max}	$q_{v\ max}$	l/min	427	427	427
Differential pressure	Δp	bar	250	201	163
	Δp_{peak}	bar	450	450	420
Specific torque	T_k	Nm/bar	124	155	190
Motor torque	T_1	Nm	426	341	277
Output torque	$\mathbf{T_{2\ perm.}}$	**Nm**	**31000**	**31000**	**31000**
Output torque	$\mathbf{T_{2\ max}}$	**Nm**	**55750**	**69530**	**80000**

GMH 0080 T3 HTO SO - A2FE 125 / 61W-VZL

Weight: 521 kg

Transmission ratio	**i**		**72,82**	**90,82**	**111,86**
Motor displacement	V_g	cm³	125,0	125,0	125,0
Total displacement	$V_{g\ total}$	cm³/rev.	9103	11353	13983
Motor speed	$n_{1\ max}$	rpm	3900	3900	4000
Output speed	$n_{2\ max}$	rpm	53,6	42,9	35,8
Inlet flow rate at n_{max}	$q_{v\ max}$	l/min	427	427	427
Differential pressure	Δp	bar	214	172	139
	Δp_{peak}	bar	450	443	360
Specific torque	T_k	Nm/bar	145	181	222
Motor torque	T_1	Nm	426	341	277
Output torque	$\mathbf{T_{2\ perm.}}$	**Nm**	**31000**	**31000**	**31000**
Output torque	$\mathbf{T_{2\ max}}$	**Nm**	**65128**	**80000**	**80000**

GMH 0110 T2 HTO

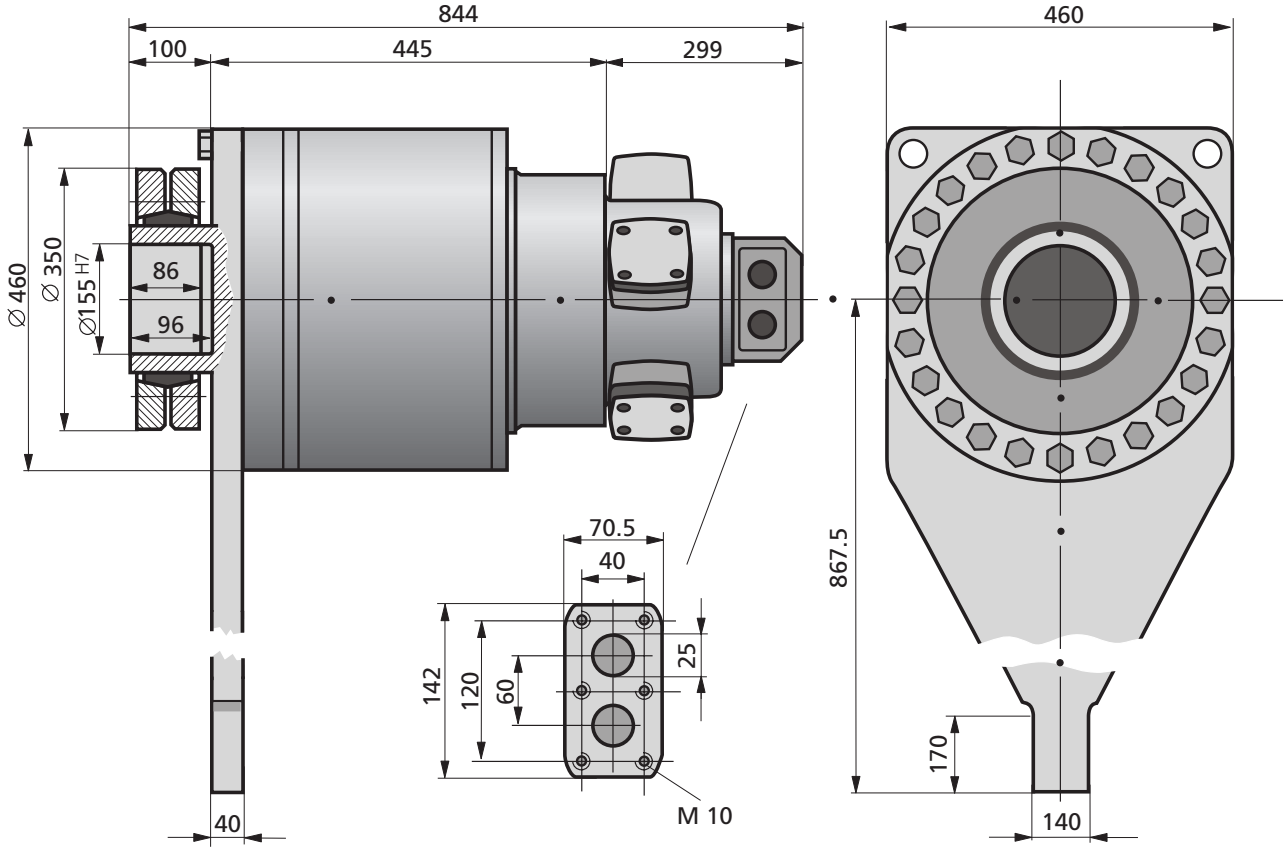

Technical Data (theoretical values, without consideration η_{mech} and η_v; values rounded)

GMH 0110 T2 HTO - MR 600 - 1

Weight: 667 kg

Transmission ratio	**i**		**24,0**
Motor displacement	V_g	cm³	607,9
Total displacement	$V_{g\ total}$	cm³/rev.	14590
Motor speed	$n_{1\ max}$	rpm	500
Output speed	$n_{2\ max}$	rpm	20,8
Inlet flow rate at n_{max}	$q_{v\ max}$	l/min	304,0
Differential pressure	Δp	bar	198
	Δp_{peak}	bar	369
Specific torque	T_k	Nm/bar	232
Motor torque	T_1	Nm	1917
Output torque	$\mathbf{T_{2\ perm.}}$	**Nm**	**46000**
Output torque	$\mathbf{T_{2\ max}}$	**Nm**	**85500**

GMH 0110 T2 HTO - MR 700 - 1

Weight: 667 kg

Transmission ratio	**i**		**24,0**
Motor displacement	V_g	cm³	706,9
Total displacement	$V_{g\ total}$	cm³/rev.	16966
Motor speed	$n_{1\ max}$	rpm	500
Output speed	$n_{2\ max}$	rpm	20,8
Inlet flow rate at n_{max}	$q_{v\ max}$	l/min	304,0
Differential pressure	Δp	bar	171
	Δp_{peak}	bar	317
Specific torque	T_k	Nm/bar	270
Motor torque	T_1	Nm	1917
Output torque	$\mathbf{T_{2\ perm.}}$	**Nm**	**46000**
Output torque	$\mathbf{T_{2\ max}}$	**Nm**	**85500**

GMH 0110 T2 HTO

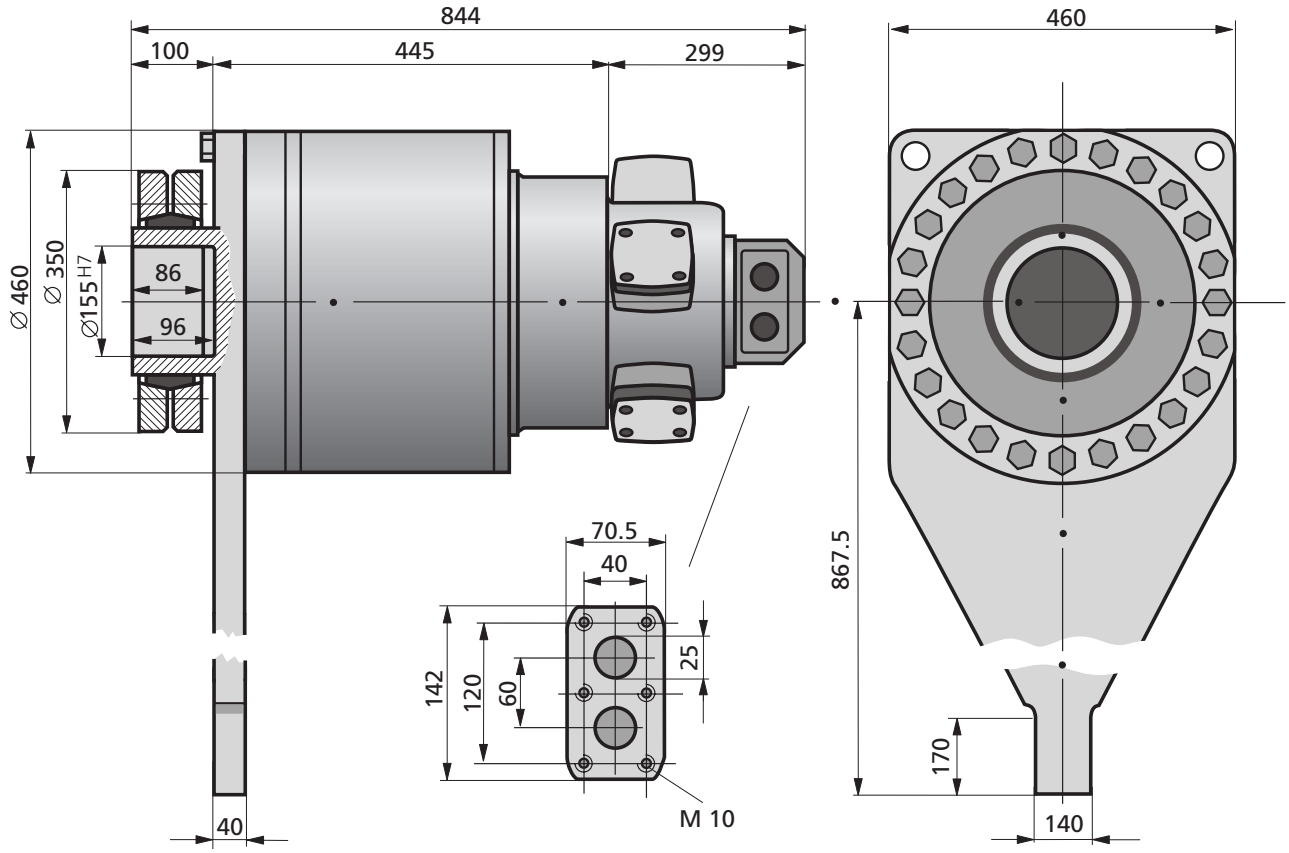

Technical Data (theoretical values, without consideration η_{mech} and η_v; values rounded)

GMH 0110 T2 HTO - MRE 800 - 1 **Weight: 667 kg**

Transmission ratio	**i**		**24,0**
Motor displacement	V_g	cm³	804,2
Total displacement	$V_{g\ total}$	cm³/rev.	19301
Motor speed	$n_{1\ max}$	rpm	450
Output speed	$n_{2\ max}$	rpm	18,8
Inlet flow rate at n_{max}	$q_{v\ max}$	l/min	362
Differential pressure	Δp	bar	150
	Δp_{peak}	bar	279
Specific torque	T_k	Nm/bar	307
Motor torque	T_1	Nm	1917
Output torque	$\mathbf{T_{2\ perm.}}$	**Nm**	**46000**
Output torque	$\mathbf{T_{2\ max}}$	**Nm**	**85500**

GMH 0110 T2 HTO SO

Hollow Shaft Alternative: ø 180 mm

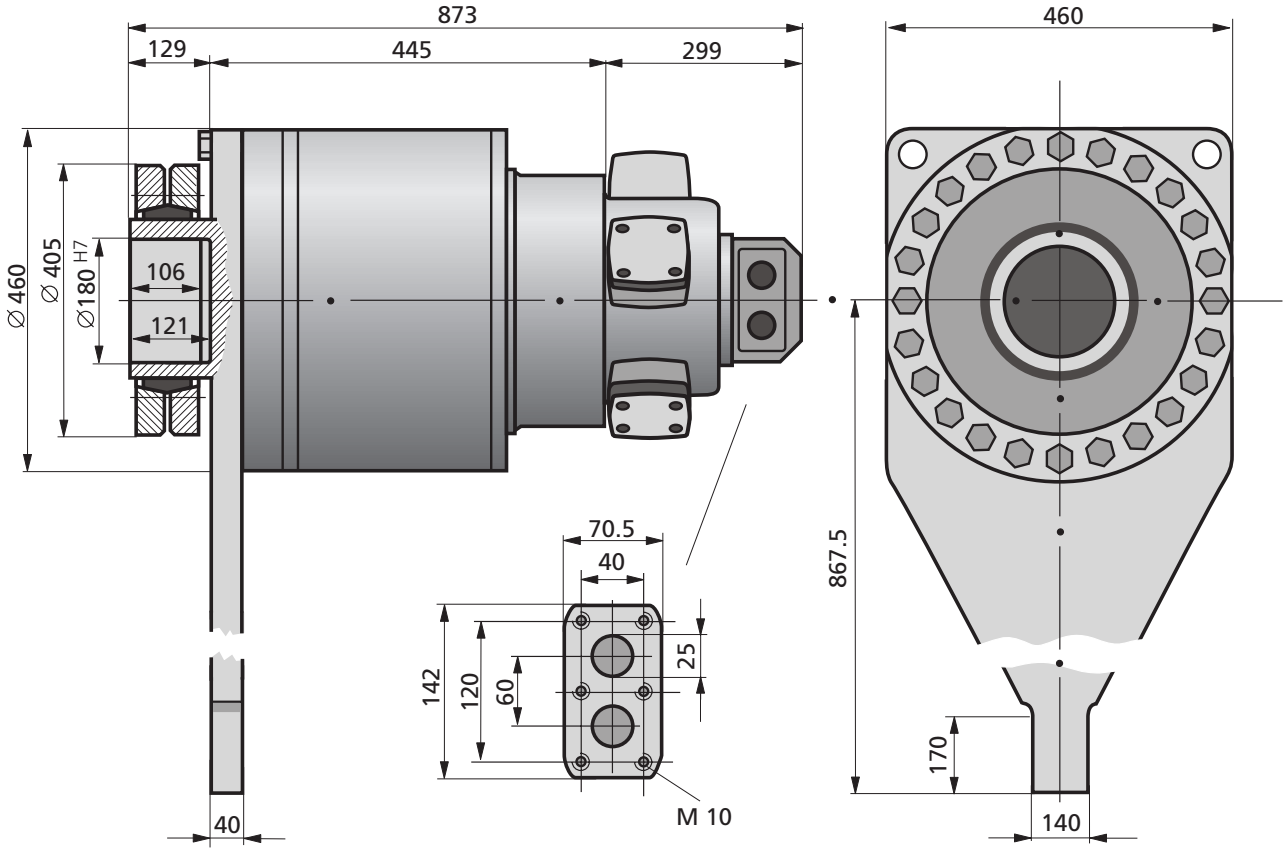

Technical Data (theoretical values, without consideration η_{mech} and η_v; values rounded)

GMH 0110 T2 HTO SO - MR 600 - 1

Weight: 667 kg

Transmission ratio	**i**		**24,0**
Motor displacement	V_g	cm³	607,9
Total displacement	$V_{g\ total}$	cm³/rev.	14590
Motor speed	$n_{1\ max}$	rpm	500
Output speed	$n_{2\ max}$	rpm	20,8
Inlet flow rate at n_{max}	$q_{v\ max}$	l/min	304,0
Differential pressure	Δp	bar	198
	Δp_{peak}	bar	420
Specific torque	T_k	Nm/bar	232
Motor torque	T_1	Nm	1917
Output torque	$\mathbf{T_{2\ perm.}}$	**Nm**	**46000**
Output torque	$\mathbf{T_{2\ max}}$	**Nm**	**97429**

GMH 0110 T2 HTO SO - MR 700 - 1

Weight: 667 kg

Transmission ratio	**i**		**24,0**
Motor displacement	V_g	cm³	706,9
Total displacement	$V_{g\ total}$	cm³/rev.	16966
Motor speed	$n_{1\ max}$	rpm	500
Output speed	$n_{2\ max}$	rpm	20,8
Inlet flow rate at n_{max}	$q_{v\ max}$	l/min	304,0
Differential pressure	Δp	bar	171
	Δp_{peak}	bar	408
Specific torque	T_k	Nm/bar	270
Motor torque	T_1	Nm	1917
Output torque	$\mathbf{T_{2\ perm.}}$	**Nm**	**46000**
Output torque	$\mathbf{T_{2\ max}}$	**Nm**	**110000**

GMH 0110 T2 HTO SO

Hollow Shaft Alternative: ø 180 mm

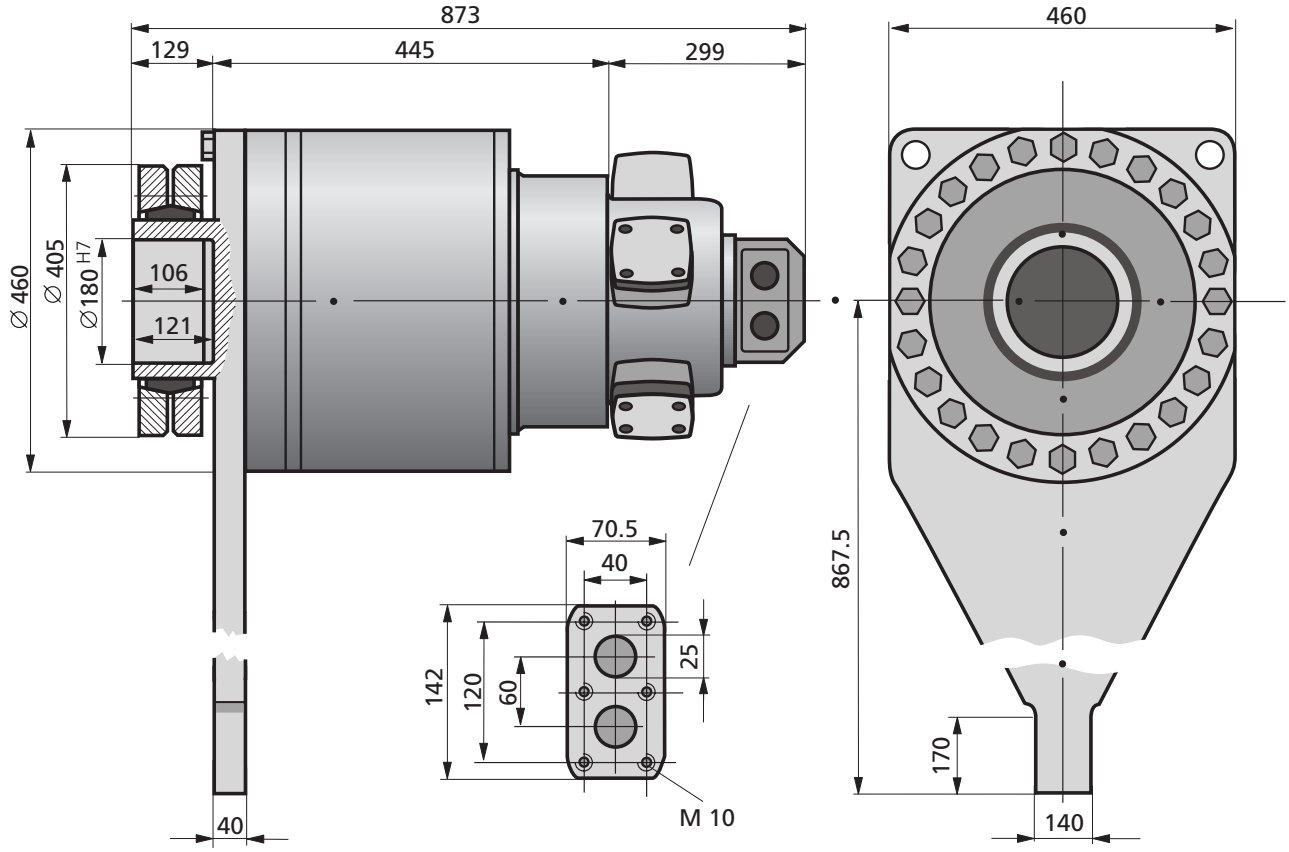

Technical Data (theoretical values, without consideration η_{mech} and η_v; values rounded)

GMH 0110 T2 HTO SO- MRE 800 - 1 **Weight: 667 kg**

Transmission ratio	**i**		**24,0**
Motor displacement	V_g	cm³	804,2
Total displacement	$V_{g\ total}$	cm³/rev.	19301
Motor speed	$n_{1\ max}$	rpm	450
Output speed	$n_{2\ max}$	rpm	18,8
Inlet flow rate at n_{max}	$q_{v\ max}$	l/min	362
Differential pressure	Δp	bar	150
	Δp_{peak}	bar	350
Specific torque	T_k	Nm/bar	307
Motor torque	T_1	Nm	1917
Output torque	$\mathbf{T_{2\ perm.}}$	**Nm**	**46000**
Output torque	$\mathbf{T_{2\ max}}$	**Nm**	**107409**

GMH 0110 T3 HTO

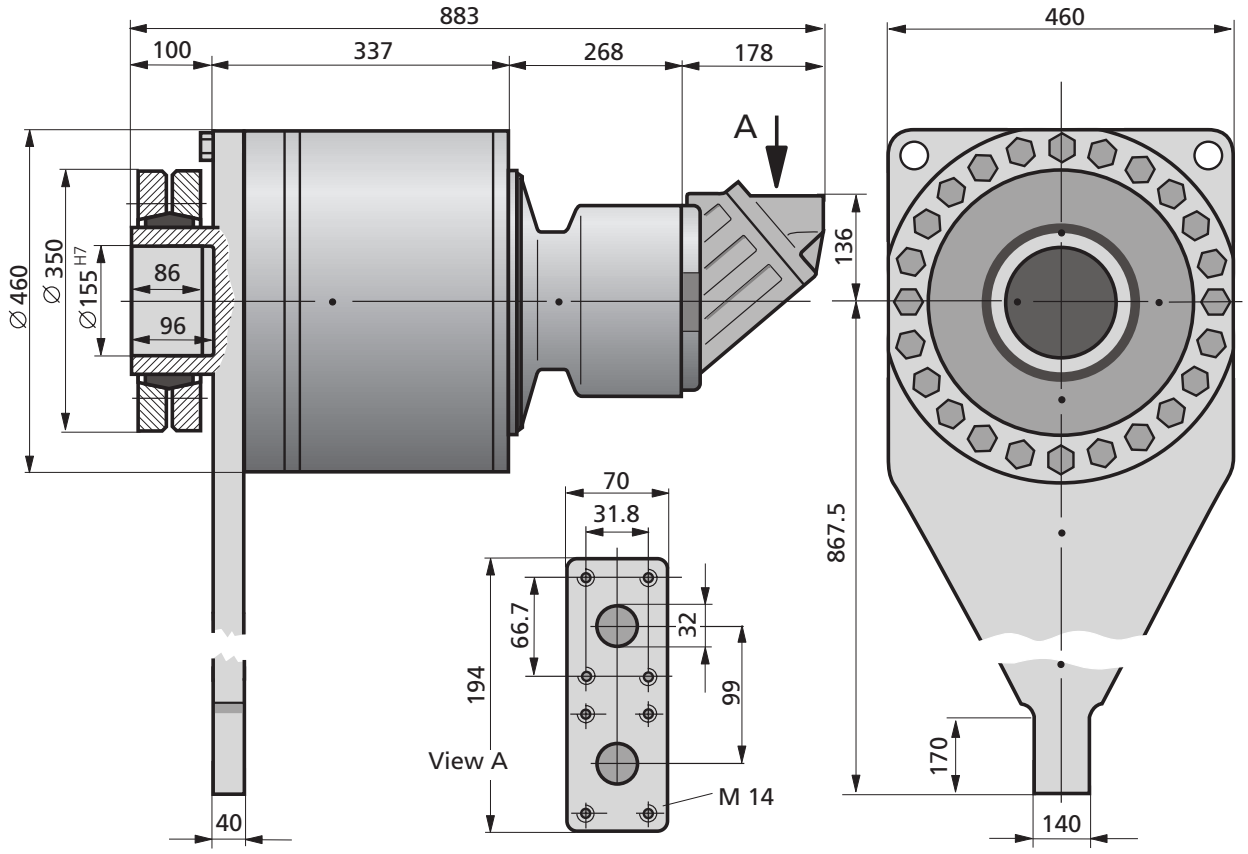

Technical Data (theoretical values, without consideration η_{mech} and η_v; values rounded)

GMH 0110 T3 HTO - A2FE 107 / 61W-VZL

Weight: 574 kg

Transmission ratio	**i**		**80,53**	**99,18**	**129,6**
Motor displacement	V_g	cm³	107	107	107
Total displacement	$V_{g\ total}$	cm³/rev.	8617	10612	13867
Motor speed	$n_{1\ max}$	rpm	3900	4000	4000
Output speed	$n_{2\ max}$	rpm	48,4	40,3	30,9
Inlet flow rate at n_{max}	$q_{v\ max}$	l/min	427	427	427
Differential pressure	Δp	bar	336	273	209
	Δp_{peak}	bar	450	450	388
Specific torque	T_k	Nm/bar	137	169	220
Motor torque	T_1	Nm	571	464	355
Output torque	$T_{2\ perm.}$	**Nm**	**46000**	**46000**	**46000**
Output torque	$T_{2\ max}$	**Nm**	**61653**	**75931**	**85500**

GMH 0110 T3 HTO - A2FE 125 / 61W-VZL

Weight: 576 kg

Transmission ratio	**i**		**80,53**	**99,18**	**129,6**
Motor displacement	V_g	cm³	125,0	125,0	125,0
Total displacement	$V_{g\ total}$	cm³/rev.	10066	12398	16200
Motor speed	$n_{1\ max}$	rpm	3900	4000	4000
Output speed	$n_{2\ max}$	rpm	48,4	40,3	30,9
Inlet flow rate at n_{max}	$q_{v\ max}$	l/min	427	427	427
Differential pressure	Δp	bar	287	233	179
	Δp_{peak}	bar	450	434	332
Specific torque	T_k	Nm/bar	160	197	258
Motor torque	T_1	Nm	571	464	355
Output torque	$T_{2\ perm.}$	**Nm**	**46000**	**46000**	**46000**
Output torque	$T_{2\ max}$	**Nm**	**72024**	**85500**	**85500**

GMH 0110 T3 HTO SO

Hollow Shaft Alternative: ø 180 mm

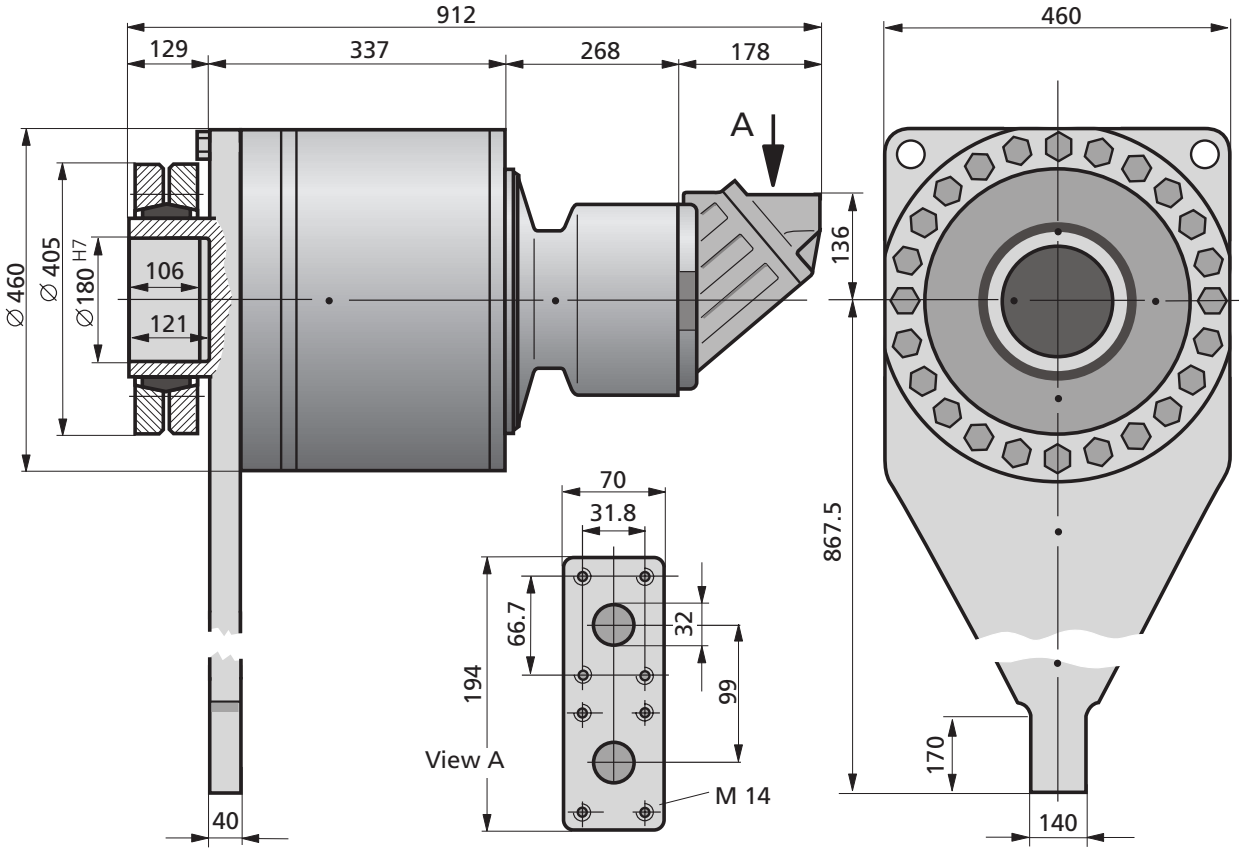

Technical Data (theoretical values, without consideration η_{mech} and η_v; values rounded)

GMH 0110 T3 HTO SO - A2FE 107 / 61W-VZL

Weight: 574 kg

Transmission ratio	**i**		**80,53**	**99,18**	**129,6**
Motor displacement	V_g	cm³	107	107	107
Total displacement	$V_{g\ total}$	cm³/rev.	8617	10612	13867
Motor speed	$n_{1\ max}$	rpm	3900	4000	4000
Output speed	$n_{2\ max}$	rpm	48,4	40,3	30,9
Inlet flow rate at n_{max}	$q_{v\ max}$	l/min	427	427	427
Differential pressure	Δp	bar	336	273	209
	Δp_{peak}	bar	450	450	450
Specific torque	T_k	Nm/bar	137	169	220
Motor torque	T_1	Nm	571	464	355
Output torque	$T_{2\ perm.}$	**Nm**	**46000**	**46000**	**46000**
Output torque	$T_{2\ max}$	**Nm**	**61653**	**75931**	**99220**

GMH 0110 T3 HTO SO - A2FE 125 / 61W-VZL

Weight: 576 kg

Transmission ratio	**i**		**80,53**	**99,18**	**129,6**
Motor displacement	V_g	cm³	125,0	125,0	125,0
Total displacement	$V_{g\ total}$	cm³/rev.	10066	12398	16200
Motor speed	$n_{1\ max}$	rpm	3900	4000	4000
Output speed	$n_{2\ max}$	rpm	48,4	40,3	30,9
Inlet flow rate at n_{max}	$q_{v\ max}$	l/min	427	427	427
Differential pressure	Δp	bar	287	233	179
	Δp_{peak}	bar	450	450	427
Specific torque	T_k	Nm/bar	160	197	258
Motor torque	T_1	Nm	571	464	355
Output torque	$T_{2\ perm.}$	**Nm**	**46000**	**46000**	**46000**
Output torque	$T_{2\ max}$	**Nm**	**72024**	**88704**	**110000**

GMH 0110 T3 ZFO

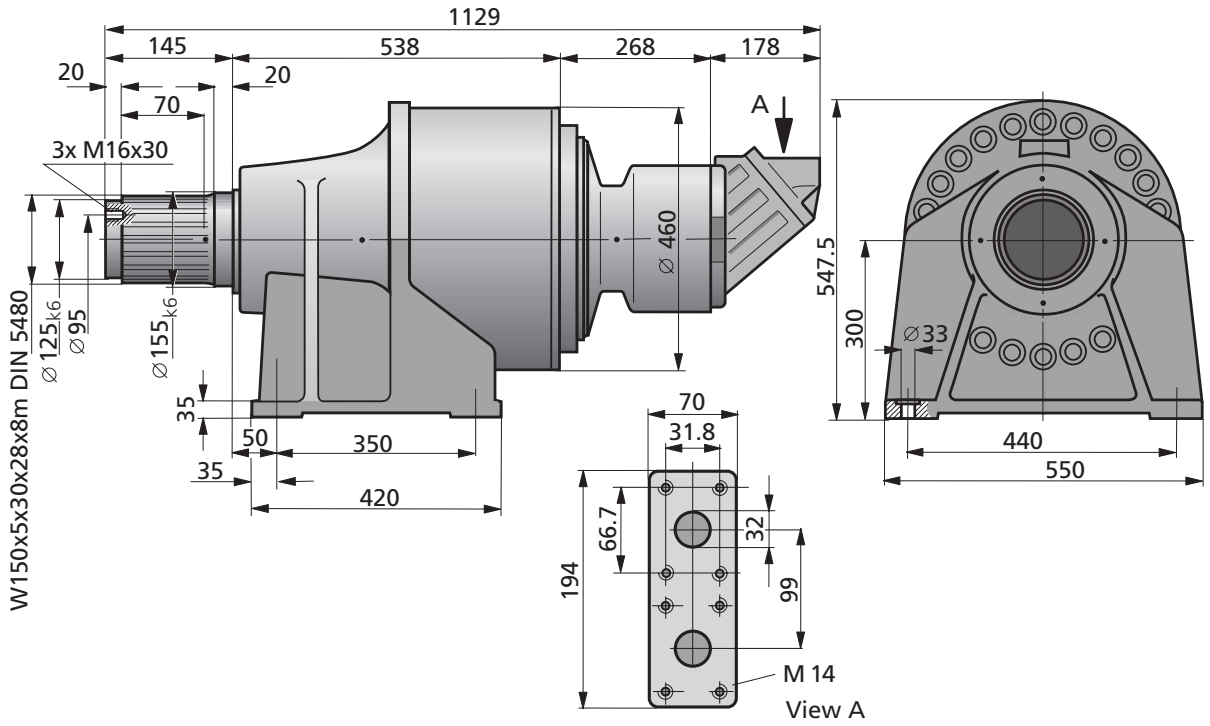

Technical Data (theoretical values, without consideration η_{mech} and η_v; values rounded)

GMH 0110 T3 ZFO - A2FE 107 / 61W-VZL

Weight: 574 kg

Transmission ratio	**i**		**80,53**	**99,18**	**129,6**
Motor displacement	V_g	cm³	107	107	107
Total displacement	$V_{g\ total}$	cm³/rev.	8617	10612	13867
Motor speed	$n_{1\ max}$	rpm	3900	4000	4000
Output speed	$n_{2\ max}$	rpm	48,4	40,3	30,9
Inlet flow rate at n_{max}	$q_{v\ max}$	l/min	427	427	427
Differential pressure	Δp	bar	336	273	209
	Δp_{peak}	bar	450	450	388
Specific torque	T_k	Nm/bar	137	169	220
Motor torque	T_1	Nm	571	464	355
Output torque	$\mathbf{T_{2\ perm.}}$	**Nm**	**46000**	**46000**	**46000**
Output torque	$\mathbf{T_{2\ max}}$	**Nm**	**61653**	**75931**	**85500**

GMH 0110 T3 ZFO - A2FE 125 / 61W-VZL

Weight: 576 kg

Transmission ratio	**i**		**80,53**	**99,18**	**129,6**
Motor displacement	V_g	cm³	125,0	125,0	125,0
Total displacement	$V_{g\ total}$	cm³/rev.	10066	12398	16200
Motor speed	$n_{1\ max}$	rpm	3900	4000	4000
Output speed	$n_{2\ max}$	rpm	48,4	40,3	30,9
Inlet flow rate at n_{max}	$q_{v\ max}$	l/min	427	427	427
Differential pressure	Δp	bar	287	233	179
	Δp_{peak}	bar	450	434	332
Specific torque	T_k	Nm/bar	160	197	258
Motor torque	T_1	Nm	571	464	355
Output torque	$\mathbf{T_{2\ perm.}}$	**Nm**	**46000**	**46000**	**46000**
Output torque	$\mathbf{T_{2\ max}}$	**Nm**	**72024**	**85500**	**85500**

GMH 0110 T4 HTO

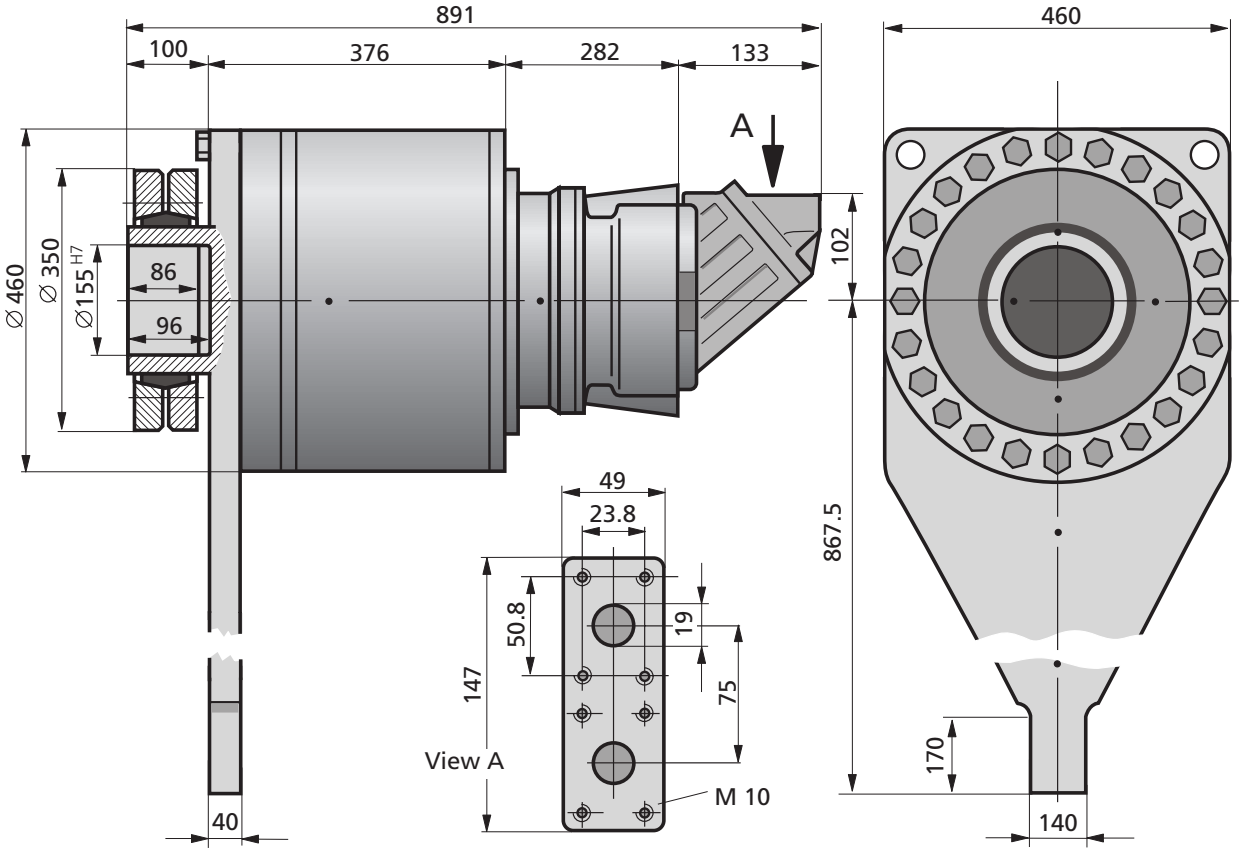

Technical Data (theoretical values, without consideration η_{mech} and η_v; values rounded)

GMH 0110 T4 HTO - A2FE 45 / 61W-VZL **Weight: 555 kg**

Transmission ratio	**i**		**658,29**
Motor displacement	V_g	cm³	45,6
Total displacement	$V_{g\ total}$	cm³/rev.	30018
Motor speed	$n_{1\ max}$	rpm	5600
Output speed	$n_{2\ max}$	rpm	8,5
Inlet flow rate at n_{max}	$q_{v\ max}$	l/min	255
Differential pressure	Δp	bar	96
	Δp_{peak}	bar	179
Specific torque	T_k	Nm/bar	477
Motor torque	T_1	Nm	70
Output torque	$\mathbf{T_{2\ perm.}}$	**Nm**	**46000**
Output torque	$\mathbf{T_{2\ max}}$	**Nm**	**85500**

GMH 0110 T4 HTO SO

Hollow Shaft Alternative: ø 180 mm

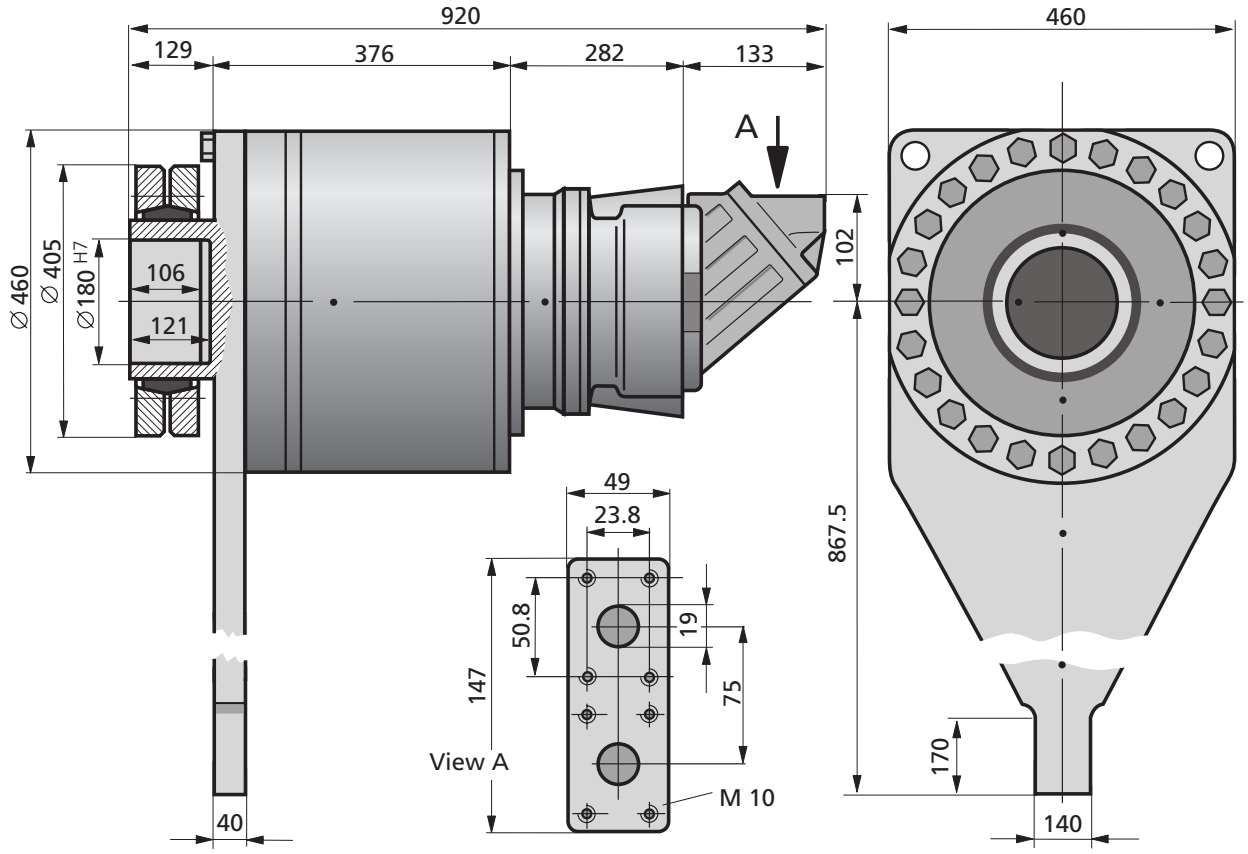

Technical Data (theoretical values, without consideration η_{mech} and η_v; values rounded)

GMH 0110 T4 HTO SO - A2FE 45 / 61W-VZL **Weight: 555 kg**

Transmission ratio	**i**		**658,29**
Motor displacement	V_g	cm³	45,6
Total displacement	$V_{g\ total}$	cm³/rev.	30018
Motor speed	$n_{1\ max}$	rpm	5600
Output speed	$n_{2\ max}$	rpm	8,5
Inlet flow rate at n_{max}	$q_{v\ max}$	l/min	255
Differential pressure	Δp	bar	96
	Δp_{peak}	bar	230
Specific torque	T_k	Nm/bar	477
Motor torque	T_1	Nm	70
Output torque	$\mathbf{T_{2\ perm.}}$	**Nm**	**46000**
Output torque	$\mathbf{T_{2\ max}}$	**Nm**	**110000**

GMH 0160 T3 HTO

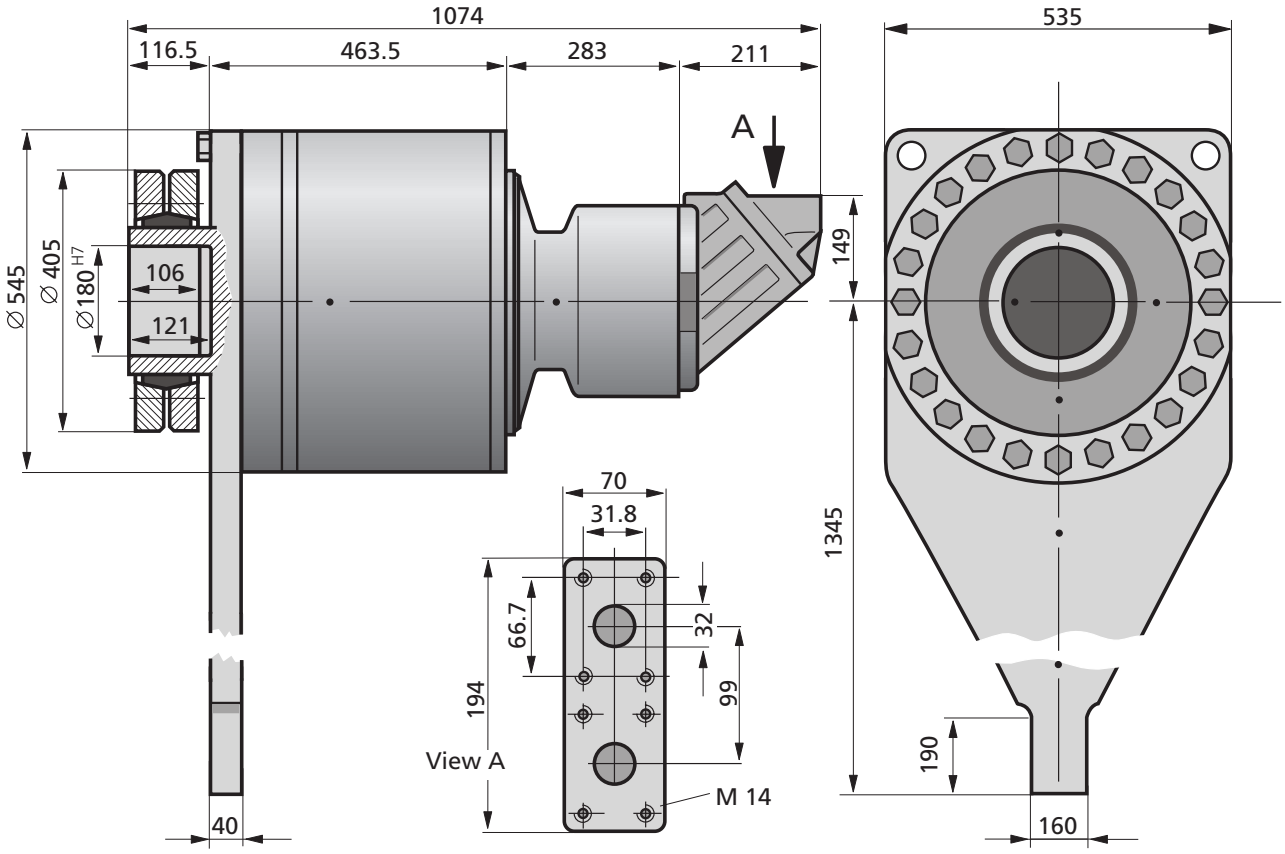

Technical Data (theoretical values, without consideration η_{mech} and η_v; values rounded)

GMH 0160 T3 HTO - A2FE 160 / 61W-VZL

Weight: 972 kg

Transmission ratio	**i**		**102,6**
Motor displacement	V_g	cm³	160,0
Total displacement	$V_{g\ total}$	cm³/rev.	16416
Motor speed	$n_{1\ max}$	rpm	3600
Output speed	$n_{2\ max}$	rpm	35,1
Inlet flow rate at n_{max}	$q_{v\ max}$	l/min	577
Differential pressure	Δp	bar	268
	Δp_{peak}	bar	450
Specific torque	T_k	Nm/bar	261
Motor torque	T_1	Nm	682
Output torque	$\mathbf{T_{2\ perm.}}$	**Nm**	**70000**
Output torque	$\mathbf{T_{2\ max}}$	**Nm**	**117456**

GMH 0160 T3 HTO - A2FE 180 / 61W-VZL

Weight: 973 kg

Transmission ratio	**i**		**102,6**
Motor displacement	V_g	cm³	180,0
Total displacement	$V_{g\ total}$	cm³/rev.	18468
Motor speed	$n_{1\ max}$	rpm	3600
Output speed	$n_{2\ max}$	rpm	35,1
Inlet flow rate at n_{max}	$q_{v\ max}$	l/min	648,0
Differential pressure	Δp	bar	238
	Δp_{peak}	bar	450
Specific torque	T_k	Nm/bar	294
Motor torque	T_1	Nm	682
Output torque	$\mathbf{T_{2\ perm.}}$	**Nm**	**70000**
Output torque	$\mathbf{T_{2\ max}}$	**Nm**	**132139**

GMH 0200 R2 HTO

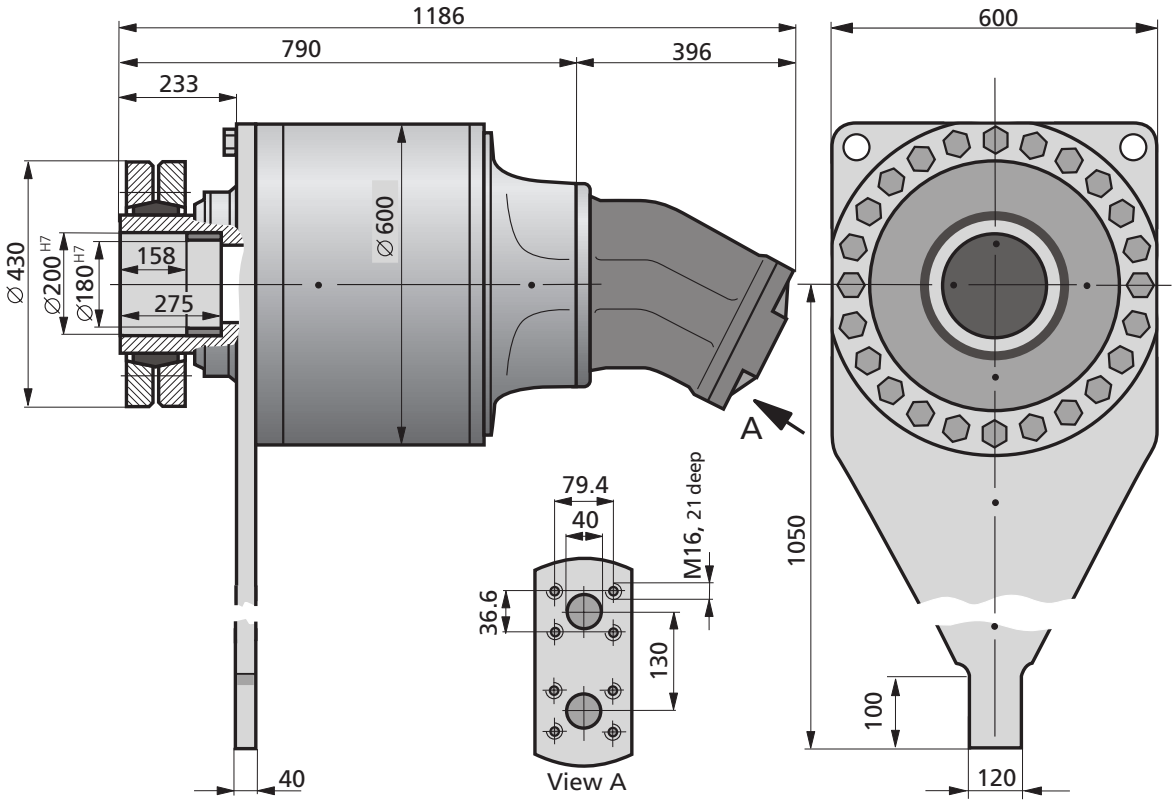

Technical Data (theoretical values, without consideration η_{mech} and η_v; values rounded)

GMH 0200 R2 HTO - A2FM 500 / W60-VZH **Weight: 1250 kg**

Transmission ratio	**i**		**47,37**
Motor displacement	V_g	cm³	500
Total displacement	$V_{g\ total}$	cm³/rev.	23685
Motor speed	$n_{1\ max}$	rpm	2000
Output speed	$n_{2\ max}$	rpm	42,2
Inlet flow rate at n_{max}	$q_{v\ max}$	l/min	1000
Differential pressure	Δp	bar	201
	Δp_{peak}	bar	400
Specific torque	T_k	Nm/bar	377
Motor torque	T_1	Nm	1600
Output torque	$\mathbf{T_{2\ perm.}}$	**Nm**	**75800**
Output torque	$\mathbf{T_{2\ max}}$	**Nm**	**150637**

GMH 0300 R2 HTO

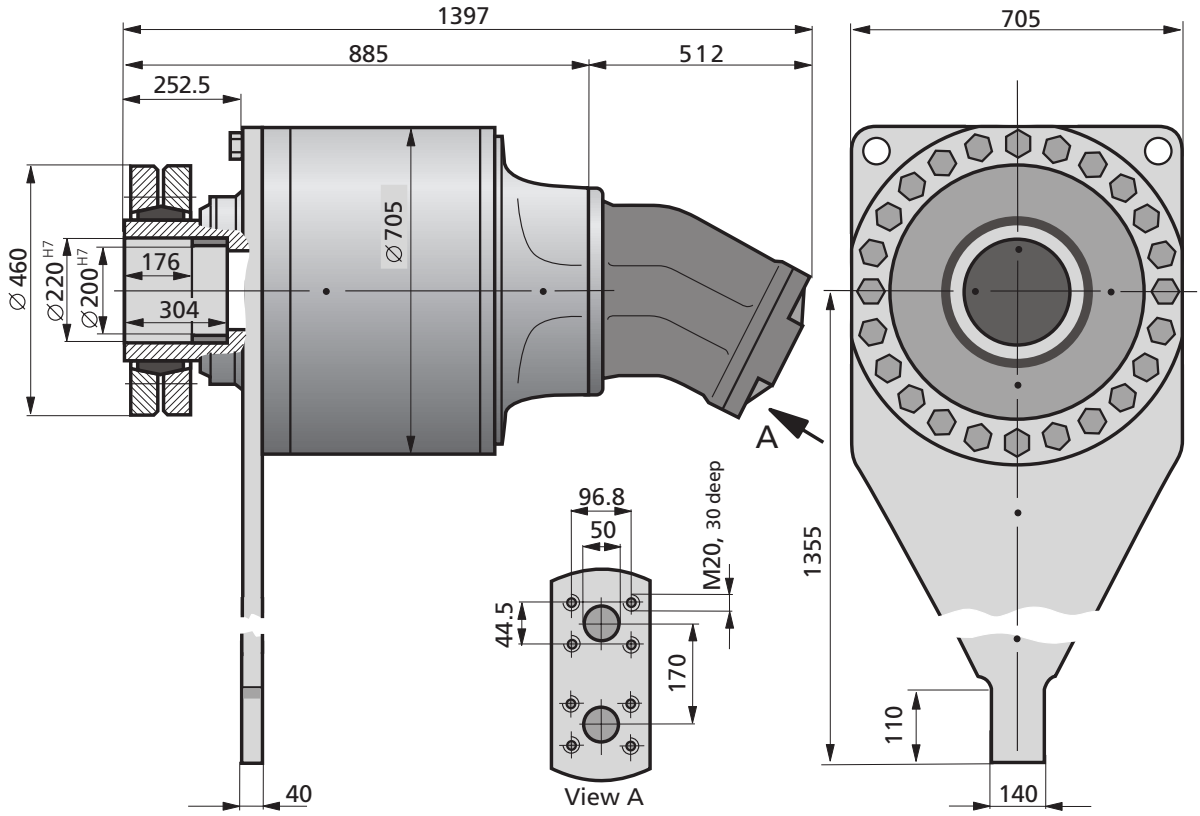

Technical Data (theoretical values, without consideration η_{mech} and η_v; values rounded)

GMH 0300 R2 HTO - A2FLM 1000 **Weight: 2000 kg**

Transmission ratio	**i**		**36,84**
Motor displacement	V_g	cm³	1000
Total displacement	$V_{g\ total}$	cm³/rev.	36840
Motor speed	$n_{1\ max}$	rpm	1600
Output speed	$n_{2\ max}$	rpm	43,4
Inlet flow rate at n_{max}	$q_{v\ max}$	l/min	1600
Differential pressure	Δp	bar	200
	Δp_{peak}	bar	400
Specific torque	T_k	Nm/bar	586
Motor torque	T_1	Nm	3176
Output torque	$\mathbf{T_{2\ perm.}}$	**Nm**	**117000**
Output torque	$\mathbf{T_{2\ max}}$	**Nm**	**234300**

GMH 0425 R2 HTO

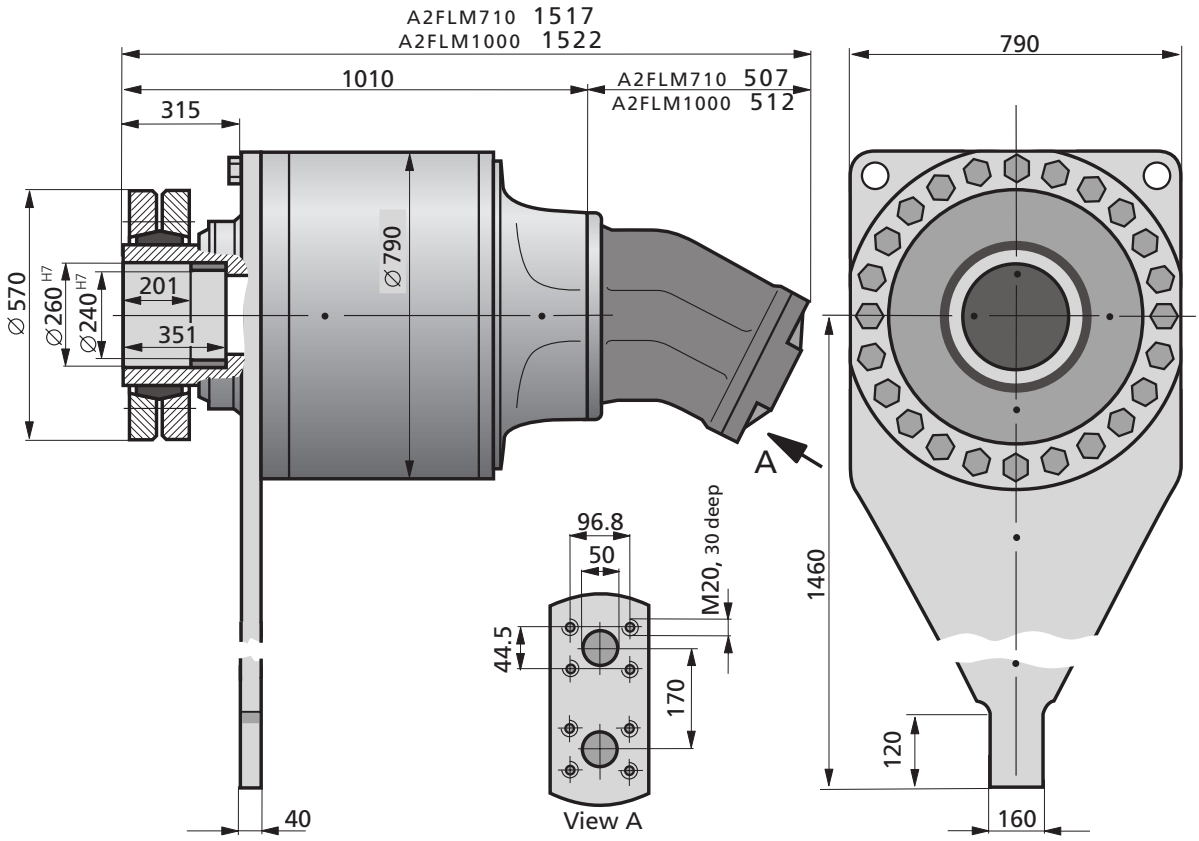

Technical Data (theoretical values, without consideration η_{mech} and η_v; values rounded)

GMH 0425 R2 HTO - A2FLM 710 / 60W-VZH

Weight: 2560 kg

Transmission ratio	**i**		**47,37**
Motor displacement	V_g	cm³	710
Total displacement	$V_{g\ total}$	cm³/rev.	33633
Motor speed	$n_{1\ max}$	rpm	1600
Output speed	$n_{2\ max}$	rpm	33,8
Inlet flow rate at n_{max}	$q_{v\ max}$	l/min	1136
Differential pressure	Δp	bar	282
	Δp_{peak}	bar	400
Specific torque	T_k	Nm/bar	535
Motor torque	T_1	Nm	3179
Output torque	$\mathbf{T_{2\ perm.}}$	**Nm**	**150600**
Output torque	$\mathbf{T_{2\ max}}$	**Nm**	**213904**

GMH 0425 R2 HTO - A2FLM 1000 / 60W-VZH

Weight: 2560 kg

Transmission ratio	**i**		**47,37**
Motor displacement	V_g	cm³	1000
Total displacement	$V_{g\ total}$	cm³/rev.	47370
Motor speed	$n_{1\ max}$	rpm	1600
Output speed	$n_{2\ max}$	rpm	33,8
Inlet flow rate at n_{max}	$q_{v\ max}$	l/min	1600
Differential pressure	Δp	bar	200
	Δp_{peak}	bar	400
Specific torque	T_k	Nm/bar	753
Motor torque	T_1	Nm	3179
Output torque	$\mathbf{T_{2\ perm.}}$	**Nm**	**150600**
Output torque	$\mathbf{T_{2\ max}}$	**Nm**	**301260**

Notice

GMH 0870 R3 HTO

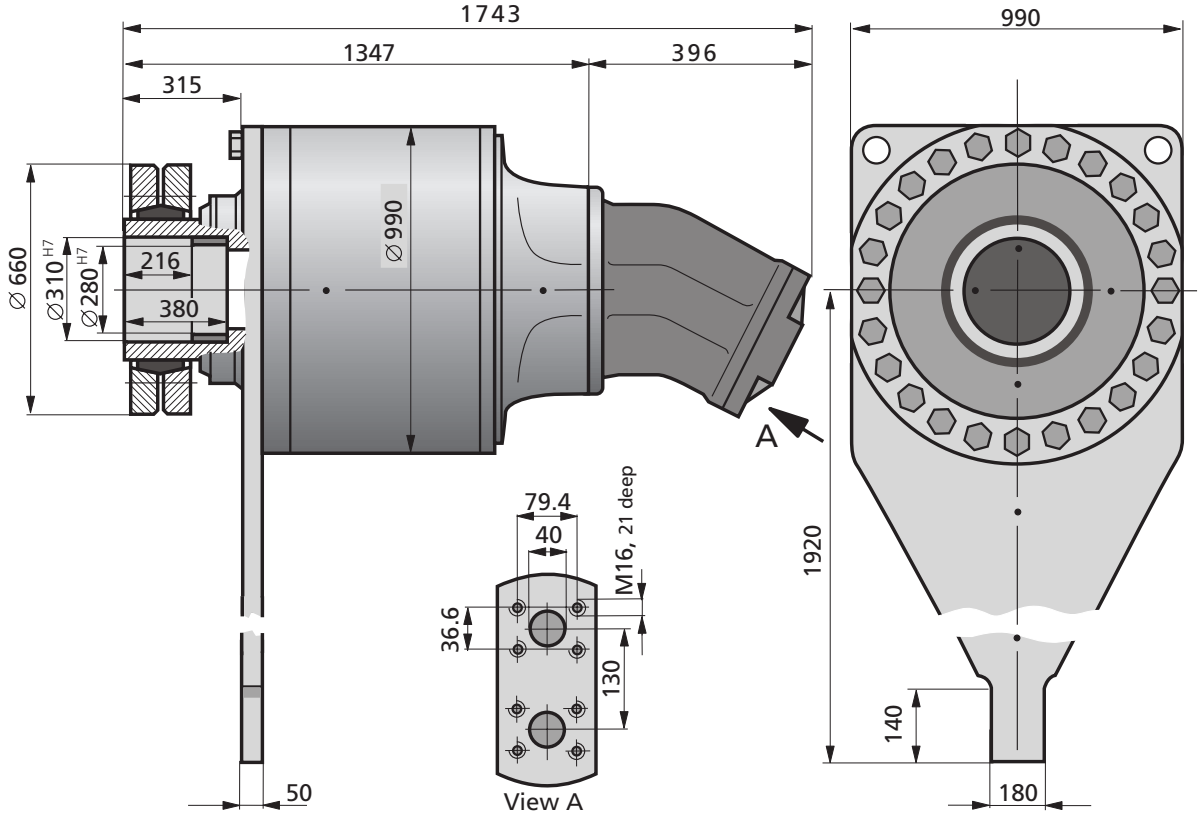

Technical Data (theoretical values, without consideration η_{mech} and η_v; values rounded)

GMH 0870 R3 HTO 500 - A2FLM 500 / W60-VZH **Weight: 3500 kg**

Transmission ratio	**i**		**203,01**
Motor displacement	V_g	cm³	500
Total displacement	$V_{g\ total}$	cm³/rev.	101505
Motor speed	$n_{1\ max}$	rpm	2000
Output speed	$n_{2\ max}$	rpm	9,9
Inlet flow rate at n_{max}	$q_{v\ max}$	l/min	1000
Differential pressure	Δp	bar	203
	Δp_{peak}	bar	400
Specific torque	T_k	Nm/bar	1614
Motor torque	T_1	Nm	1616
Output torque	$\mathbf{T_{2\ perm.}}$	**Nm**	**328000**
Output torque	$\mathbf{T_{2\ max}}$	**Nm**	**645572**

GMH 0870 R3 HTO

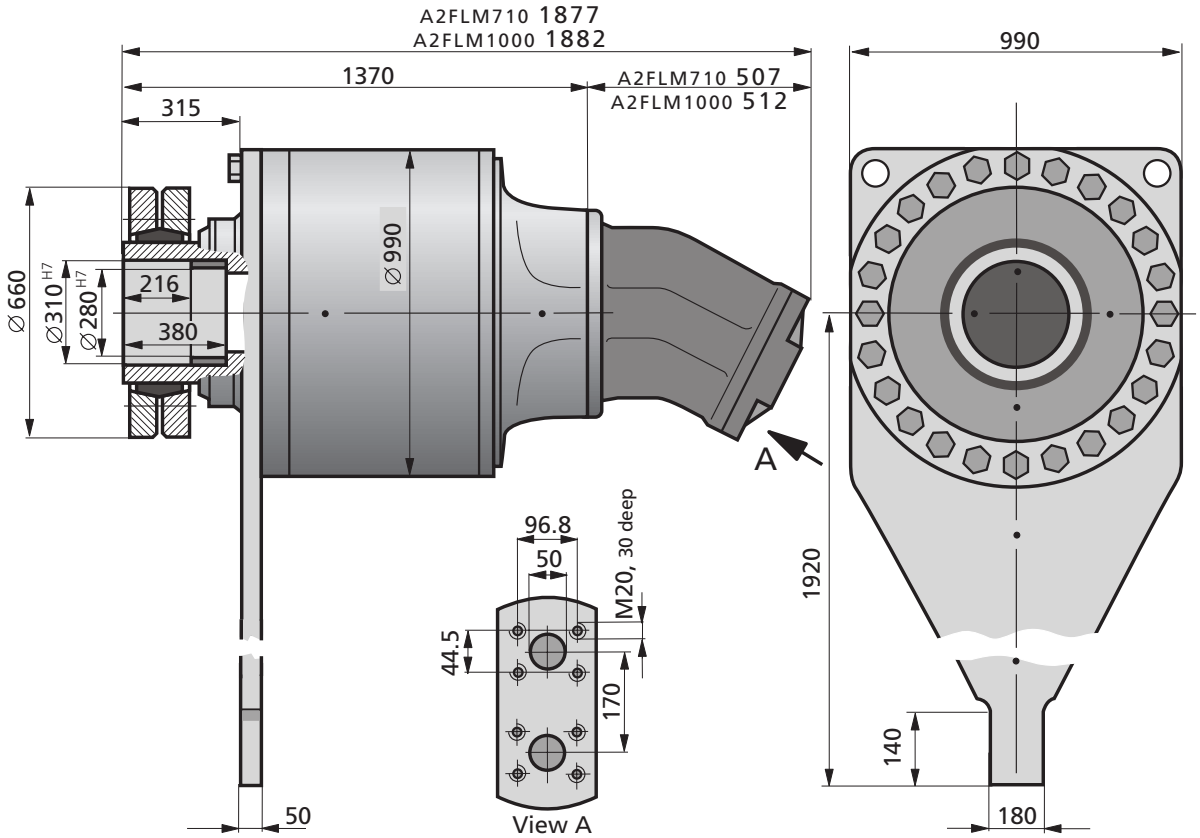

Technical Data (theoretical values, without consideration η_{mech} and η_v; values rounded)

GMH 0870 R3 HTO 1000 - A2FLM 710 / 60W-VZH

Weight: 3650kg

Transmission ratio	**i**		**203,01**
Motor displacement	V_g	cm³	710
Total displacement	$V_{g\ total}$	cm³/rev.	144137
Motor speed	$n_{1\ max}$	rpm	1600
Output speed	$n_{2\ max}$	rpm	7,9
Inlet flow rate at n_{max}	$q_{v\ max}$	l/min	1136
Differential pressure	Δp	bar	143
	Δp_{peak}	bar	305
Specific torque	T_k	Nm/bar	2292
Motor torque	T_1	Nm	1616
Output torque	$\mathbf{T_{2\ perm.}}$	**Nm**	**328000**
Output torque	$\mathbf{T_{2\ max}}$	**Nm**	**698170**

GMH 0870 R3 HTO 1000 - A2FLM 1000 / 60W-VZH

Weight: 3650kg

Transmission ratio	**i**		**203,01**
Motor displacement	V_g	cm³	1000
Total displacement	$V_{g\ total}$	cm³/rev.	203010
Motor speed	$n_{1\ max}$	rpm	1600
Output speed	$n_{2\ max}$	rpm	7,9
Inlet flow rate at n_{max}	$q_{v\ max}$	l/min	1600
Differential pressure	Δp	bar	102
	Δp_{peak}	bar	216
Specific torque	T_k	Nm/bar	3228
Motor torque	T_1	Nm	1616
Output torque	$\mathbf{T_{2\ perm.}}$	**Nm**	**328000**
Output torque	$\mathbf{T_{2\ max}}$	**Nm**	**698170**

Notice

Rexroth
Bosch Group

Our production program for industrial applications

REDULUS GME Compact Gears of Planetary Design

Various mounting positions, types of fastening as well as input and output side configurations to suit the relevant application. Input and output shafts can be arranged coaxially, offset or angular to each other. Gearteeth of spur and planetary wheels are case hardened and ground.

Ratios between 3.85 and 2000 : 1
Torque rates between 2400 and 2000000 Nm

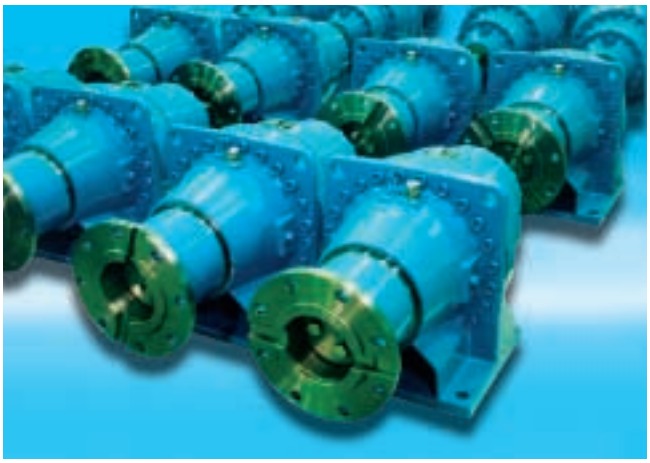

REDULUS GME planetary gearbox
for use in continuous casting plants

HYDRODRIVE GMH Shaft-mounted Gears Ready for Installation

with attached hydraulic motor for use in many industrial areas. Simple mounting, true running even at low speed rates, compact design, low weight.
Torques ranging between 2000 and 328000 kNm

HYDRODRIVE GMH as hydraulic drive element
in shredding plants

Planetary Gearbox Applications, eg

- in general and heavy machinery construction
- in environmental applications and in plastics processing
- in plant construction and in handling systems

REDULUS GPV planetary gearbox
modified for use in a wind power station

Bosch Rexroth AG
Mobile Hydraulics
Getriebetechnik
Mannesmannstraße, D-58455 Witten
Postfach 1860, D-58408 Witten

Tel. +49 (0)2303 877-360
Telefax +49 (0)2303 877-404
E-mail: info.brm-gt@boschrexroth.de
www.boschrexroth.com

Dimensions and technical data will be revised as necessary. Only the valid installation drawing shall be considered binding in each individual case.

Reprints not permitted - Subject to change.